MANUAL DEL PROPIETARIO

Secadora de Eléctrica y Gas

DLE5977W/DLG5988W
DLE5977B/DLG5988B
DLE3777W/DLG3788W

Gracias por comprar una secadora Completamente Automática LG. Por favor lea su manual del propietario cuidadosamente, ya que le proveerá de instrucciones sobre la segura instalación, manejo y mantenimiento. Consérvelo para futuras referencias, archive el modelo y números de serie de su secadora.

Owner's Manual

Electric and Gas Dryer

DLE5977W/DLG5988W
DLE5977B/DLG5988B
DLE3777W/DLG3788W

Thank you for buying an LG dryer.
Please read your owner's manual carefully, as it provides instructions on safe installation, use, and maintenance.
Retain it for future reference and record the model and serial numbers of your dryer.

P/No.: 3828EL3003A

PRODUCT FEATURES

1 **OUTSTANDING PERFORMANCE**

Not to mention unmatched big capacity, you can benefit from good time efficiency, quiet operation and energy saving system.

2 **STAINLESS STEEL DRUM**

Stainless steel drum doesn't have any rust by nature so that rust-free drum keeps clothes away from stain all time.

3 **ARTISTIC DESIGN**

Modern front panel look and big crystal-clear glass door make your house look stylish.

4 **DIGITAL FABRIC CARE**

Multi-level temperature control heater takes a better care on your valued clothes.

5 **EASY OF USE**

A whole selection of user-friendly functions always make you comfortable with dryer operation.

TABLE OF CONTENTS

PART1. SPECIFICATIONS 3

PART2. IMPORTANT WARRANTY AND SAFETY INSTRUCTIONS 4-6

PART3. INITIAL STEPS FOR INSTALLING YOUR DRYER 7-12

PART4. ELECTRICAL REQUIREMENTS FOR ELECTRIC DRYER 13-18

PART5. ELECTRICAL REQUIREMENTS FOR GAS DRYERS 19

PART6. GAS REQUIREMENTS AND INSTRUCTIONS.....20

PART7. EXHAUST REQUIREMENTS AND MAINTENANCE.....21-22

PART8. OPERATING YOUR DRYER.....23-28

PART9. TROUBLESHOOTING GUIDE 29-31

LG DRYER LIMITED WARRANTY 32

Part 1 SPECIFICATIONS

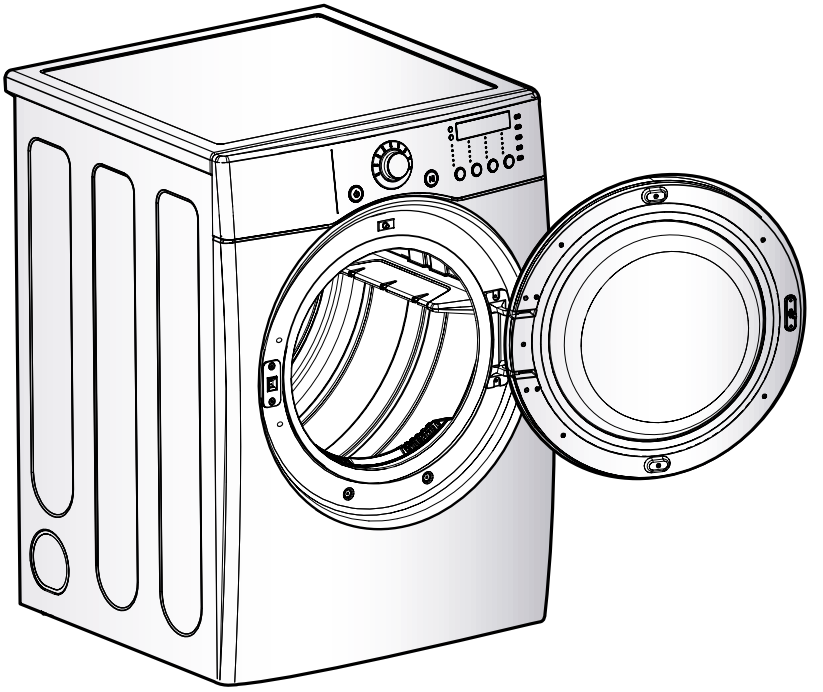

■ Name : Electric and Gas Dryer

■ Power supply : Please refer to the rating label regarding detailed information.

■ Size : 68.6X98.3X76.1(cm)

■ Dryer capacity : IEC 7.3cu.ft.

■ Weight(lbs) : 126

Specifications are subject to change by manufacturer.

■ ACESSORIES

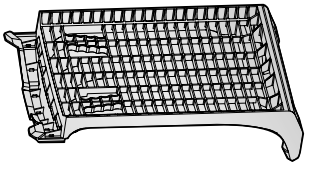

Dryer rack (1 each)

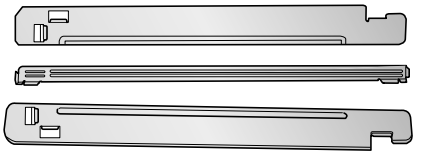

Stacking kit (1 each)
Purchased Separately

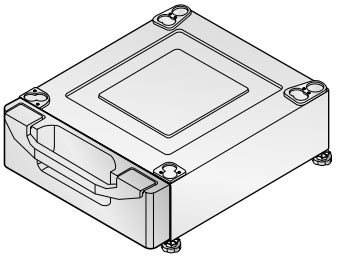

Pedestal (1 each)
Purchased Separately

SEEKING WARRANTY ASSISTANCE

Warranty Service. **The warranty for your dryer is printed the end** of this manual. Warranty service is available by contacting your nearest LG Service Center and, for warranty period from the date of purchase, if this dryer is installed and operated according to the instructions in this manual, LG will repair or replace any of its mechanical or electrical parts if they are defective in material or workmanship.

⚠ *WARNING!*

For your safety, the recommendations in this manual must be followed. To reduce the risk of fire or explosion, electric shock, or to prevent property damage, personal injury, or death when using your appliance, follow basic precautions, including the following.

Warranty Restriction: If the dryer is subjected to other than private family use, all warranty coverage is effective for only 90 days.

You will need the complete model and serial numbers when requesting information. We recommend that you staple your sales slip or cancelled check here, because proof of original purchase date is needed to obtain warranty service. Your dryer's model and serial numbers are located on the Model and Serial Number Plate located on the front of the dryer behind the door.

Use the space below to record the model number and serial number of your new LG dryer.

Model No. _____

Serial No. _____

Date of Purchase _____

❊ Staple your receipt hear.

IMPORTANT SAFETY INSTRUCTIONS

⚠ WARNING!

to help reduce any risk of electric shock, fire, or other personal or property injury when using your dryer, please exercise care and follow basic safety precautions, including the following:

1) Read all instructions before using the appliance.
2) Do not dry articles that have come into contact with gasoline, dry-cleaning solvents, or other flammable or explosive substances, as they give off vapors that could ignite or explode.
3) Do not allow children to play on or in the appliance. Close supervision of children is necessary when using the appliance.
4) Before the appliance is removed from service or discarded, remove the door to the drying compartment.
5) Do not reach into the appliance if the drum is moving.
6) Do not install or store this appliance where it will be exposed to the weather.
7) Do not tamper with controls.
8) Do not repair or replace any part of the appliance or attempt any servicing unless specifically recommended in the user-maintenance instructions.
9) Do not use heat to dry articles containing foam rubber or similarly textured rubber-like materials.
10) Clean lint screen before or after each load.
11) Keep area around the exhaust opening and adjacent surrounding areas free from the accumulation of lint, dust, and dirt.
12) The interior of the appliance and exhaust duct should be cleaned periodically by qualified service personnel.
13) Do not place items exposed to cooking oils in your dryer. Items contaminated with cooking oils may contribute to a chemical reaction that could cause a load to catch fire.
14) Do not use fabric softners or products to eliminate static unless recommended by the manufacturer of the fabric softner or product.

SAVE THESE INSTRUCTIONS

GROUNDING INSTRUCTIONS

This appliance must be grounded. In the event of malfunction or breakdown, grounding will reduce the risk of electric shock by providing a path of least resistance for electric current. This appliance is equipped with a cord having an equipment-grounding conductor and a grounding plug. The plug must be plugged into an appropriate outlet that is properly installed and grounded in accordance with all local codes and ordinances.

WARNING - Improper connection of the equipment-grounding conductor can result in a risk of electric shock. Check with a qualified electrician or service person if you are in doubt as to whether the appliance is properly grounded.

Do not modify the plug provided with the appliance: if it will not fit the outlet, have a proper outlet installed by a qualified electrician.

This appliance must be connected to a grounded metal, permanent wiring system or an equipment-grounding conductor must be run with the circuit conductors and connected to the equipment-grounding terminal or lead on the appliance.

WHAT TO DO IF YOU SMELL GAS:

- Do not try to light a match or cigarette, or turn on any gas or electrical appliance.
- Do not touch any electrical switches. Do not use any phone in your building.
- Clear the room, building or area of all occupants.
- Immediately call your gas supplier from a neighbor's phone. Follow the gas supplier's instructions carefully.
- If you cannot reach your gas supplier, call the fire department.

WARNING

To reduce the risk of fire or explosion, electric shock, property damage, personal injury or death when using this appliance, please follow all instructions and information, including those in this manual and instructions and information provided by your gas supplier, including the following:

- Do not store or use any gasoline, dry-cleaning solvents any other flammable vapors or liquids in the area surrounding this appliance.
- Do not dry anything that has ever had anything flammable on it, even after washing.
- No washer can completely remove oil. Do not dry any articles that have ever had any kind of oil on them, including cooking oil.
- Articles containing foam, rubber, rubber-like materials, plastic or similar materials should be dried on a clothesline or by using an air cycle.
- Failure to follow these instructions can result in fire, death or serious injury.
- A qualified service person or company must perform installation and service of this appliance.

WARNING!

- Keep flammable materials and vapors, such as gasoline, away from dryer.
- Place dryer at least 18 inches above the floor for a garage installation.
- Failure to do so can result in death, explosion or fire.

California safe drinking water and toxic enforcement act

This act requires the governor of California to publish a list of substances known to the state to cause cancer, birth defects or other reproductive harm and requires businesses to warn customers of potential exposure to such substances.

Gas appliances can cause minor exposure to four of these substances, namely benzene, carbon monoxide, formaldehyde and soot, caused primarily by the incomplete combustion of natural gas or LP fuels.

Properly adjusted dryers will minimize combustion. Exposure to these substances can be minimized further by properly venting the dryer to the outdoors.

Part 3 INITIAL STEPS FOR INSTALLING YOUR DRYER

The following instructions will help guide you through the initial steps of setting up your dryer for use. Please note that every section of this manual provides important information regarding the preparation and use of your dryer, and it is important that you review this entire manual before proceeding with any installation or use. More detailed instructions concerning electrical connections, gas connections, and exhaust requirements are provided at other parts of this manual.

STEP 1: Positioning the Dryer.

Choose a location with a solid floor for your dryer. Place the dryer at least eighteen inches above the floor for a garage installation. After placing the dryer in the desired location, please confirm that the dryer has the required clearances through reference to the following information and manual sections on Exhaust Requirements and Maintenance.
If you are installing your dryer in a manufactured or mobile home, please refer to STEP 9 below for additional instructions.

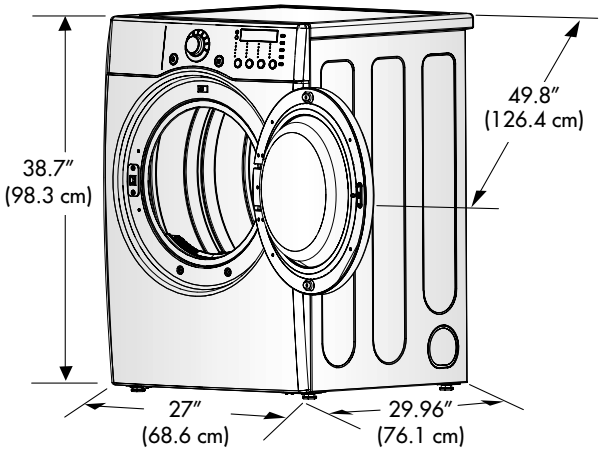

* Most installations require a minimum 5 1/2 in. (14 cm) clearance behind the dryer for the exhaust vent with elbow.

Installing Your Dryer in a Closet or Recessed Area. Following are instructions concerning and the minimum clearances required for any closet, recessed area, or customized under-counter installation:

- Additional spacing should be considered for installation and servicing.
- Additional clearances might be required for wall, door, and floor moldings.
- Additional spacing of 1 in. (2.5 cm) on all sides of the dryer is recommended to reduce noise transfer.
- For closet installation with a door, minimum ventilation openings in the top and bottom of the door are required. Louvered doors with equivalent ventilation openings are acceptable. Companion appliance spacing should also be considered.

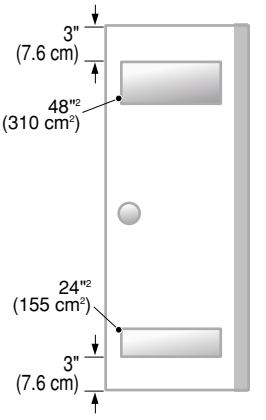

<Closet door with ventilation hole.>

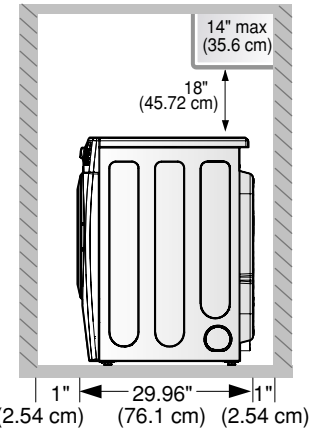

<Side view-closet or conined area.>

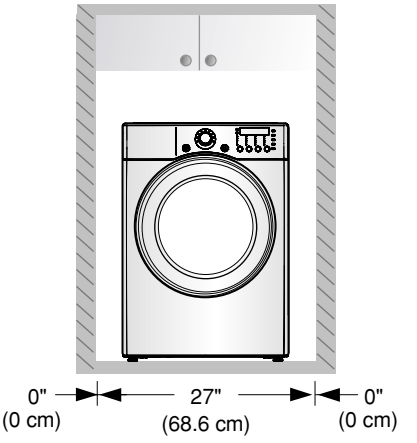

<Recessed Area>

Once in position, adjust the leveling legs of the dryer until it is level from left to right and from front to back. The leveling legs must remain firmly on the floor and the dryer should not rock. The maximum slope of the dryer from left to right or from front to back should not exceed 2.5 cm (1 inch). If the dryer is not level, and if the slope exceeds 2.5 cm (1 inch), a load may not tumble properly and internal sensors may malfunction. Note: Other sections of this manual also provide important information concerning the placement of and clearances for your dryer. Please review this entire manual before proceeding with any installation.

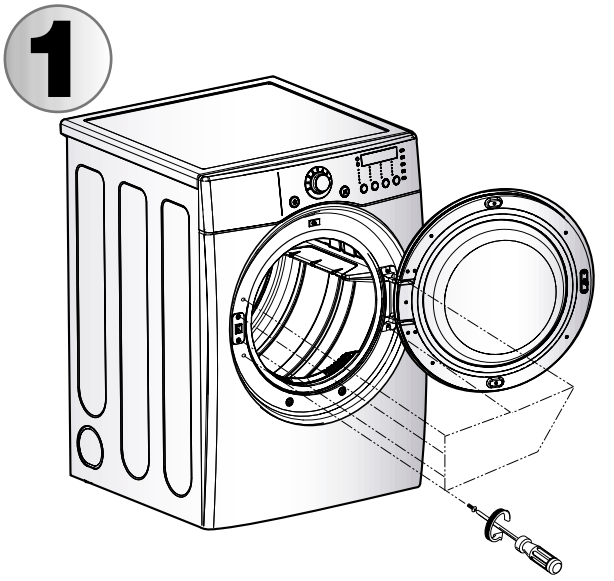

STEP 2: Procedure for Reversing the Door

The door on your dryer can be installed to open either to the left or the right. Follow these procedures to reverse the direction in which your door opens:

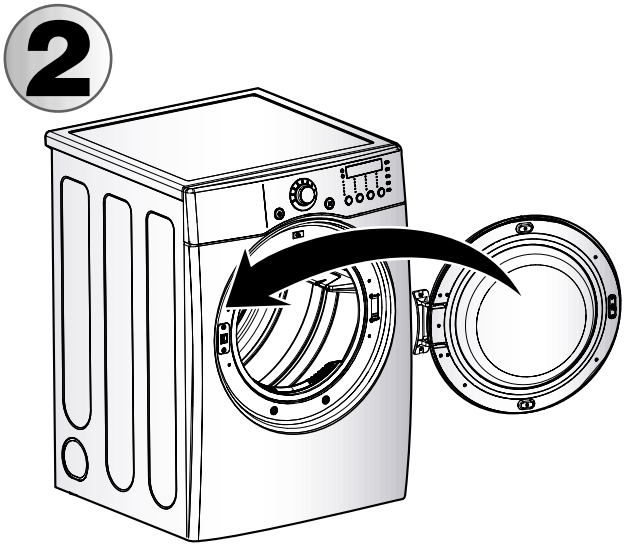

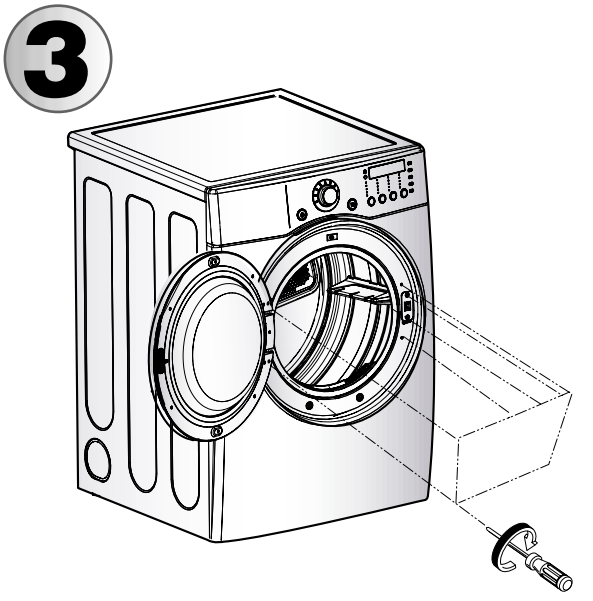

STEP 3: Connecting the Exhaust and Venting System.

In addition to the following warnings, please refer to manual section on Exhaust Requirements and Maintenance. **IMPORTANT:** To reduce the risk of fire, combustion, and gas accumulation, the dryer must be vented to the outdoors. Please follow the instructions (and all others in this manual) very carefully.

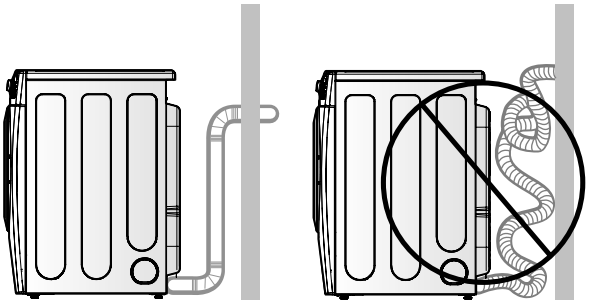

- Do not use thin plastic or foil ducting.
- Use 4" (10.2 cm) diameter rigid or flexible metal duct (note: venting materials are not supplied with the dryer, and you should obtain the venting materials necessary for proper installation)
- Position the dryer where the exhaust duct is shorter as possible
- ***Clean old ducts before installing this dryer***
- The male end of each section of exhaust duct must point away from the dryer
- Use fewer elbow joints as possible
- Use duct tape on all duct joints
- Insulate ductwork that runs through unheated areas in order to reduce condensation and lint build-up on pipe walls; and
- **PLEASE BE AWARE THAT FAILURE TO EXHAUST THE DRYER CORRECTLY WILL VOID THE DRYER'S WARRANTY.**

⚠ *WARNING!*

- Use a heavy metal vent.
- Do not use a plastic vent.
- Do not use a metal foil vent.
- Failure to follow these instructions can result in death or fire.
- Clean old ducts before installing this dryer

■ ALTERNATE EXHAUST DIRECTIONS

1. Remove screw & exhaust duct.

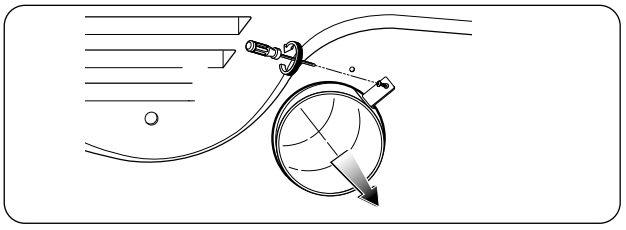

2. Detach and remove the bottom, left, or right side knockout as desired.
(Right side vent not avilable on gas dryer.)

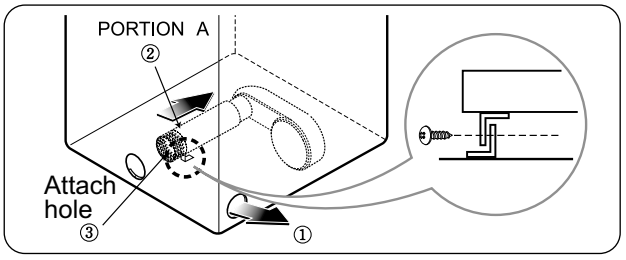

3. Reconnect the new duct[11 in(28cm)] to the blower housing, and Fixing the duct to the base.

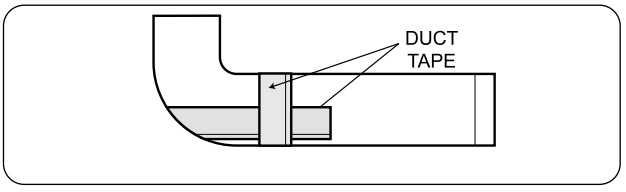

4. Pre-assemble 4" elbow with 4" duct.
Wrap duct tape around joint.

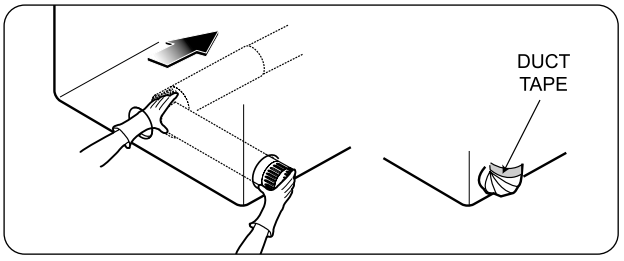

5. Insert elbow duct assembly first, through the side opening and connect the elbow to the dryer internal duct.

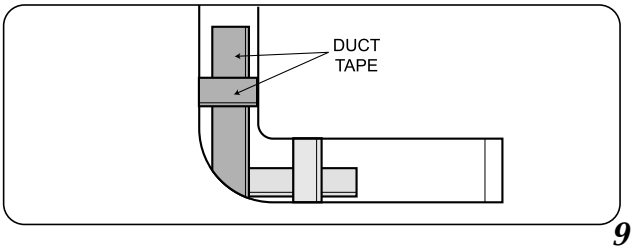

STEP 4: Connection of Gas Supply

(Gas dryer only). In addition to the following, please refer to manual section on Gas Requirements and Instructions.

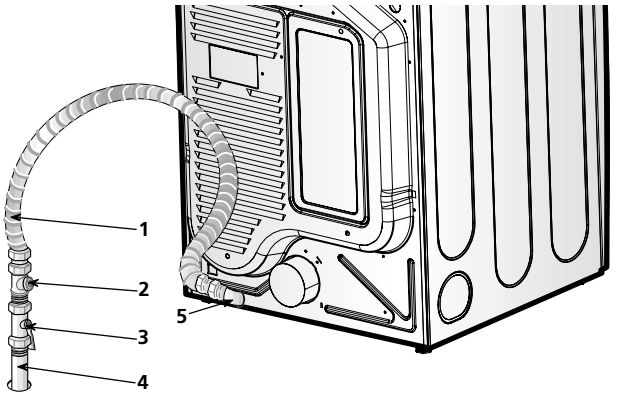

1. New stainless steel flexible connector. Use this type of connector only if allowed by local codes. Use Design AGA Certified Connector.
2. 1/8" NPT Pipe Plug (for checking inlet gas pressure)
3. Equipment Shut-Off Valve-
   Installed within 6' (1.8 m) of dryer
4. Iron Pipe. Shorter than 20' (6.1 m)
   Use 3/8" pipe. Longer than 20' (6.1 m) - Use 1/2" pipe.
5. 3/8" N.P.T. Gas Connection

1. Confirm that the type of gas available in your laundry room is appropriate for the dryer. The dryer is prepared for Natural Gas with a 3/8" NPT gas connection.
2. Remove the shipping cap from the gas connection at the back of the dryer. Make sure that you don't damage the threads of the gas connection pipe when you remove the shipping cap.
3. Connect the dryer to your laundry room's gas supply using a new flexible stainless steel connector (as noted below, only use a new stainless steel flexible connector if allowed by your local codes).
4. Securely tighten all connections between the dryer and your laundry room's gas supply. Turn on your laundry room's gas supply and check all pipe connections (both internal and external) for gas leaks with a non-corrosive leak detection fluid.
5. For LP (Liquefied Petroleum) gas connection, refer to this manual's section entitled Gas Requirements and Instructions.

STEP 5: Electrical Plug Connections for Electric Dryer Only.

Following are several warnings and instructions concerning making the electrical connection for electric dryers. More detailed information concerning the electrical connection is provided at the manual section entitled Electrical Requirements For Electric Dryer and it is important that you thoroughly review that section, and the remainder of this manual, before taking any steps to install or use this dryer.

1. Use only a new U.L. listed No. 10 (copper wire only) three conductor power supply cord kit rated 240 Volts (minimum) 30 Amperes and labeled as suitable for use in a clothes dryer.
2. Four-wire cord is required for manufactured (mobile) home installations and use and where local codes do not allow grounding of this appliance through neutral.
3. The wiring diagram is provided inside the dryer control hood. Label all wires prior to disconnection when servicing the dryer, because wiring errors can cause serious injury to you and your dryer.
4. For additional instruction on connecting the dryer to an electrical power source, please refer to this manual's section on Electrical Requirements and Electric Dryer.

⚠ WARNING!

- Use a new UL approved 30 amp power supply cord or 10 gauge solid copper wire.
- Use a UL approved strain relief.
- Disconnect power before making electrical connections.
- Connect neutral wire(white or center wire) to center terminal.
- Ground wire(green or bare wire) must be connected to green ground connector.
- Securely tighten all electrical connections
- See installation instructions for complete instructions.
- Failure to do so can result in fire or electrical shock.

Part 3 INITIAL STEPS FOR INSTALLING YOUR DRYER

STEP 6: Preparation of the Dryer.

Prior to the first use of this appliance, use all-purpose cleaning products or a solution of detergent and water, with damp clothes to remove from the inside of the dryer drum/drying compartment any dust or dirt that may have accumulated the inside of the dryer. Plug in your dryer after reviewing the following parts on your dryer's Electrical Requirements.

STEP 7: Confirming Heat Source Operation.

Confirming Heat Source in Gas Dryers

Close the door to the dryer drum/drying compartment and, after completing all steps in this manual for proper installation of this dryer, start the dryer on a heat setting, as described more fully in the operating instructions that accompany the dryer. After the dryer starts, the igniter will glow red and the main burner will ignite.

Warning: If all air is not purged from the gas line, the gas igniter may go off before the gas and the main burner have ignited. If this happens, the igniter will re-attempt gas ignition after approximately two minutes.

Confirming Heat Source in Electric Dryers

Close the door to the dryer drum/drying compartment and, after completing all steps in this manual for proper installation of this dryer, start the dryer on a heat setting, as described more fully in the operating instructions that accompany the dryer. The exhaust air or the exhaust pipe should be warm after the dryer has been operating for three minutes.

STEP 8: Dryer Airflow.

Effective dryer operation requires appropriate dryer airflow. The adequacy of the airflow can be measured by evaluating the static pressure. Static pressure in the exhaust duct can be measured with a manometer, placed on the exhaust duct approximately 2 ft. (60.9 cm) from the dryer. Static pressure in the exhaust duct should not exceed 0.6 inches (1.5 cm). The dryer should be checked with the dryer running with no load.

Measuring Static pressure

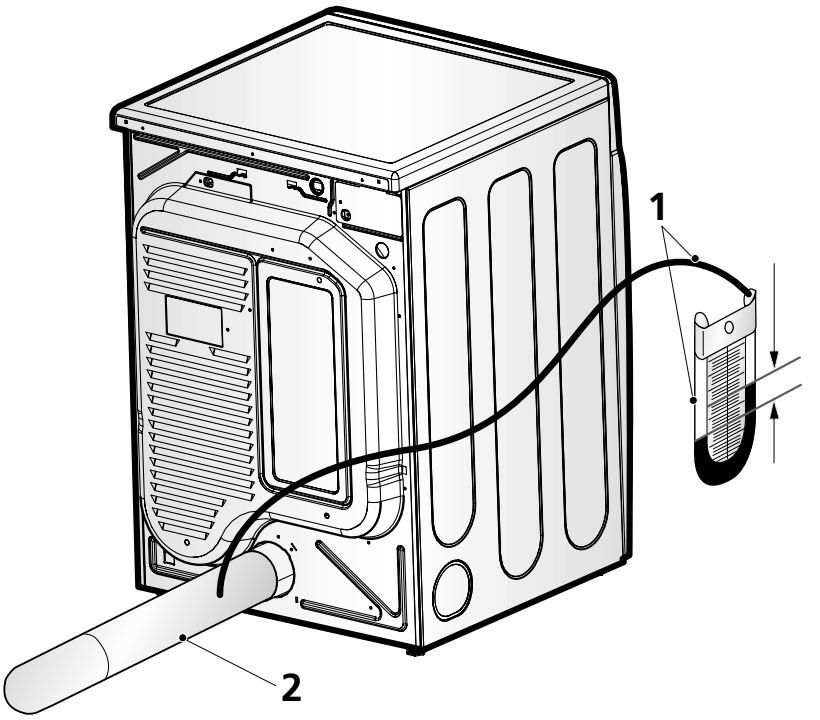

MAXIMUM STATIC PRESSURE IN WATER COLUMN

0.6 inches (1.5 cm)

1 Manometer
2 Exhaust Duct

STEP 9: Additional Instructions for Installation of Your Dryer in a Manufactured or Mobile Home.

The following instructions are applicable to installations of the dryer in a manufactured or mobile home. Any installation in a manufactured or mobile home must comply with the Manufactured Home Construction and Safety Standards Title 24 CFR, Part 32-80 or Standard CAN/CSA0Z240 MH and local codes and ordinances. If you are uncertain whether your proposed installation will comply with these standards, please contact a service and installation professional for assistance.

The following instructions apply to any installation of the dryer in a manufactured or mobile home:

1) The gas dryer must be permanently attached to the floor.
2) The electrical connection for an electric dryer must be a 4-wire connection. More detailed information concerning the electrical connection is provided at the manual section entitled Electrical Requirements for Electric Dryer
3) To reduce the risk of combustion and fire, the dryer must be vented to the outside.
4) Electric dryers may be vented to the outside using the back, left, right, or bottom panel.
5) Gas dryers may be vented to the outside using the back, left, or bottom panel. Gas dryer may not be vented to the outside using the right side panel because of the burner housing.
6) The dryer exhaust duct must be affixed securely to the manufactured or mobile home structure, and the exhaust duct must be made of a material that will resist fire and combustion, and it is recommended that you use a rigid or flexible metal pipe.
7) DO NOT connect the exhaust duct with any other duct, vent, chimney, or other exhaust duct.
8) Make sure the dryer has adequate access to outside fresh air to ensure proper operation. The opening for outside fresh air must be at least 25 in^2 (163 cm^2).
9) It is important that the clearance of the duct from any combustible construction be at least 2 inches (5 cm), and, when venting the dryer to the outdoors, the dryer can be installed with a clearances of 1 inch at the sides and back of the dryer.
10) Please be aware that venting materials are not supplied with the dryer. You should obtain the venting materials necessary for proper installation.

⚠ WARNING!

DO NOT connect exhaust ducts with metal screws or fasteners that extend into the duct.

⚠ WARNING!

DO NOT vent the exhaust duct under the manufactured or mobile home.

Part 4 ELECTRICAL REQUIREMENTS FOR ELECTRIC DRYERS

Following are additional instructions regarding electrical connections and requirements for electric dryers.

⚠ **Important Warning:** To help prevent fire, electric shock, serious injury or death, the wiring and grounding must conform to the latest edition of the National Electrical Code, ANSI/NFPA 70 and all applicable local regulations. Please contact a qualified electrician to check your home's wiring and fuses to ensure that your home has adequate electrical power to operate the dryer.

120V/ 240V, 60 Hertz, 3-Wire Installation

Instructions for Grounding of your Electric Electric Dryer:

a) Please note that the wiring diagram is provided inside the dryer control hood.

b) This dryer must be connected to a grounded metal, permanent wiring system; or an equipment-grounding conductor must be run with the circuit conductors and connected to the equipment-grounding terminal or lead on the dryer.

c) The dryer has its own terminal block that must be connected to a separate branch, 60 Hertz, single phase circuit, AC (alternating current) circuit, fused at 30 Amperes (the circuit must be fused on both sides of the line). ELECTRICAL SERVICE FOR THE DRYER SHOULD BE OF MAXIMUM RATE VOLTAGE LISTED ON THE NAMEPLATE. DO NOT CONNECT DRYER TO 110, 115, OR 120 VOLT CIRCUIT. Heating elements are available for field installation in dryers which are to be conected to electrical service of different voltage than that listed on nameplate.

d) If branch circuit to dryer is fifteen feet (4.50 m) or less in length, use U.L. (Underwriters Laboratories) listed No. 10 A.W.G. wire (copper wire only), or as required by local codes. If over fifteen feet (4.50 m), use U.L. (Underwriters Laboratories) listed No. 8 A.W.G. wire (copper wire only), or as required by local codes. Allow sufficient slack in wiring so dryer can be moved from its normal location when necessary.

e) The power cord (pigtail) connection between wall receptacle and dryer terminal block IS NOT supplied with dryer. Type of pigtail and gauge of wire must conform to local codes and with instructions mentioned on the following pages.

f) The method of wiring the dryer is optional and subject to local code requirements. Refer to examples on next page.

g) You must select the method by which to wire your dryer according to local code and ordinance requirements. Sample methods are included in the following pages.

⚠ ***WARNING!***

Label all wires prior to disconnection when servicing the dryer, because wiring errors can cause serious injury to you and your dryer.

Review the following options to determine the appropriate electrical connection for your home:

3-wire receptacle (NEMA type10-30R)

Use the instructions at this section if your home has a 3-wire receptacle (NEMA type 10-30R) and you will be using a UL listed, 120/240 volt minimum, 30 amp, dryer power supply cord.

4-wire receptacle (NEMA type14-30R)

Use the instructions at this section if your home has a 4-wire receptacle (NEMA type 14-30R) and you will be using a UL listed, 120/240 volt minimum, 30 amp, dryer power supply cord.

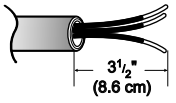

3 wire direct

If this type is available at your home. you will be connecting to a fused disconnect or circuit breaker box

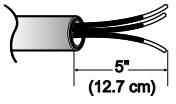

4 wire direct

If this type is available at your home. you will be connecting to a fused disconnect or circuit breaker box

4-wire connection : Direct wire

Important : The places where a 4-wire connection is needed are , for example, mobile homes and areas that local codes do not admit the use of 3-wire connections.

At least, 5ft(1.52m) of extra length is required in order for dryer to be able to be moved.

Peel 5 in (12.7cm) of external covering from end

of cable, leaving bare ground wire at 5 in (12.7cm). Cut 1 1/2 in. (3.8cm) from 3 remaining wires. Peel insulation back 1in. (2.5cm). Shape ends of wires like a hook.

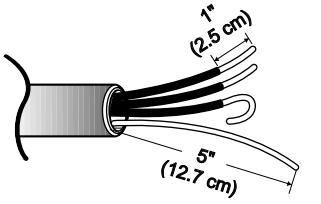

Then, put the hooked shape end of the wire under the screw of the terminal block(hooked end facing rightward) and pinch the hook together and screw tightly.

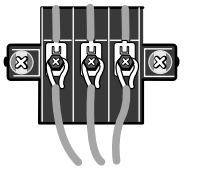

1. Take off center terminal block screw
2. Take off appliance neutral ground wire(white) from external ground connector screw. Fasten it under center, silver colored terminal block screw.
3. Connect ground wire(green) of power supply cable to external ground conductor screw. Tighten screw.

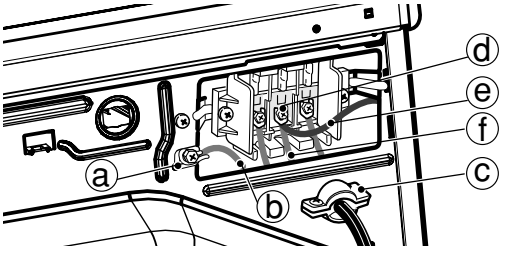

a. External ground connector
b. Green copper wire of power supply cord
c. 3/4 in. (1.9cm) UL-listed strain relief
d. Center silver-colored terminal block screw
e. Neutral grounding wire(white)
f. Neutral wire(white or center wire)

4. Put the hooked shape ends of the wire under the screw of the terminal block(hooked end facing rightward) and squeeze the hook together and screw tightly.
5. Put the hooked shaped ends of the other power supply cable wires under the outer terminal block screws(hooked end facing right) and squeeze the hooked ends together and screw tightly.

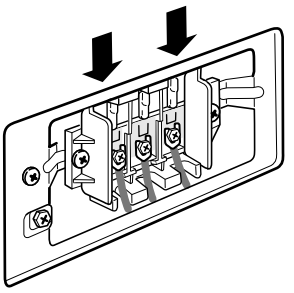

6. Tighten strain relief screws.
7. Place the tab of terminal block cover into slot of dryer rear panel. Make sure cover with screw.

3-wire connection : Direct wire

Important : The places wherea 4-wire connection is needed are mobile homes and areas that local codes do not admit the use of 3-wire connections.

At least, 5ft(1.52m) of extra length is required for dryer to be able to move.

Peel 5 in (12.7cm) of external covering from end

of cable, leaving bare ground wire at 5 in (12.7cm). Cut 1 1/2 in. (3.8cm) from 3 remaining wires. Strip insulation back 1in. (2.5cm). Shape ends of wires into a hook shape.

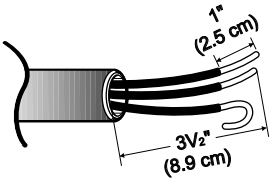

Then, put the hooked shape end of the wire under the screw of the terminal block(hooked end facing rightward) and pinch the hook together and screw tightly.

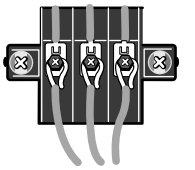

1. Take off center terminal block screw
2. Put the hooked end of the neutral wire(white) of power supply cable under the center screw of terminal block). Squeeze the hooked end together
3. Connect the hooked ends of the other power supply cable to the center screw of terminal block.
4. Screw strain relief tightly.
5. Place tab of terminal block cover into slot of dryer rear panel. Make sure cover with screw.

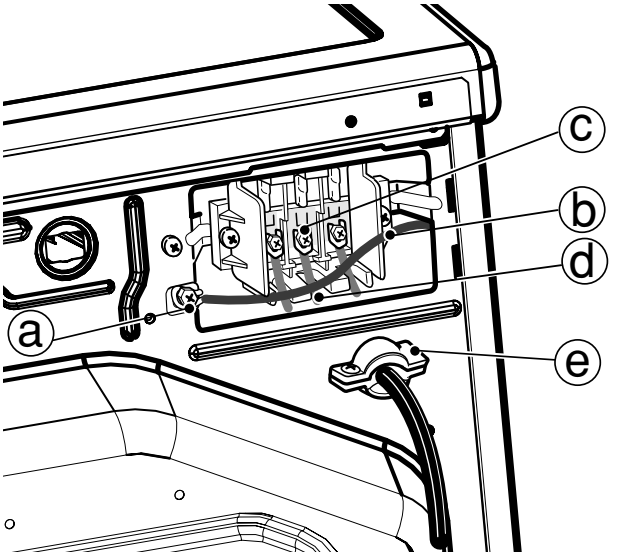

a. External ground connector
b. Neutral grounding wire (white)
c. Center silver-colored terminal block screw
d. Neutral wire (white or center wire)
e. 3/4 in. (1.9 cm) UL-listed strain relief

Option 1: 3-Wire Connection with a Power Supply Cord

If your local codes or ordinances permit the connection of a frame-grounding conductor to the neutral wire, use these instructions. If your local codes or ordinances do not allow the connection of a frame-grounding conductor to the neutral wire, use the instructions under **Section 3: Optional 3-wire connection.**

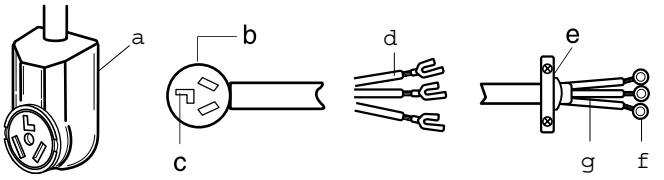

a. 3-wire receptacle (NEMA type 10-30R)
b. 3-wire plug
c. Neutral prong
d. Spade terminals with up turned ends
e. 3/4 in. (1.9 cm) UL approved strain relief
f. Ring terminals
g. Neutral (white or center wire)

1. Loosen or remove center terminal block screw.
2. Connect neutral wire (white or center wire) of power supply cord to the center, silver colored terminal screw of the terminal block. Tighten screw.

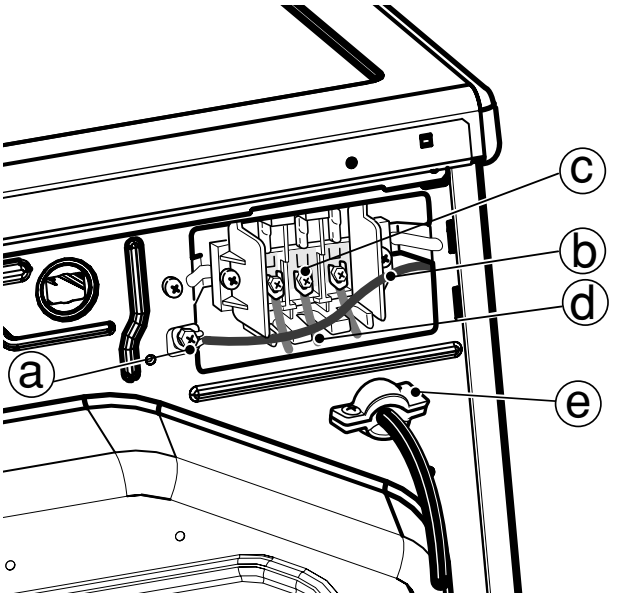

a. External ground connector
b. Neutral grounding wire (white)
c. Center silver-colored terminal block screw
d. Neutral wire (white or center wire)
e. 3/4 in. (1.9 cm) UL-listed strain relief

3. Connect the other wires to outer terminal block screws. Tighten screws.
4. Tighten strain relief screws.
5. Insert tab of terminal block cover into slot of dryer rear panel. Secure cover with hold-down screw.

Option 2: 4-wire connection with a Power supply cord.

- If your local codes or ordinances do not allow the use of a 3 wire connection, or you are installing your dryer in a mobile home, you must use a 4-wire connection.

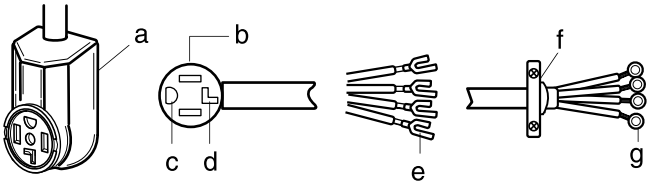

a. 4-wire receptable (NEMA type 14-30R)
b. 4-pront plug
c. Ground prong
d. Neutral Prong
e. Spade terminals with upturned ends
f. 3/4 in. (1.9 cm) UL approved strain relief
g. Ring terminals

1. Remove center terminal block screw.
2. Remove appliance neutral ground wire (white) from external ground connector screw. Fasten it under the center, silver colored terminal block screw.

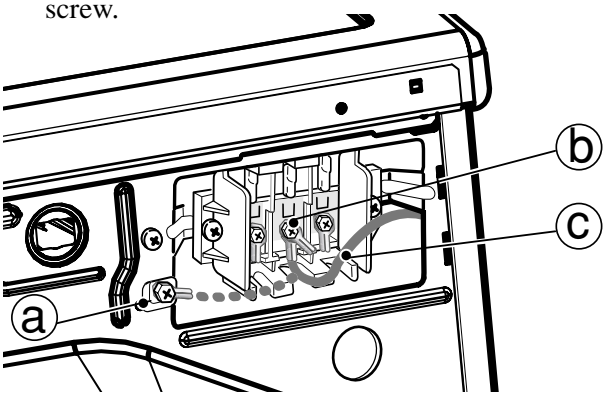

a. External ground connector - Dotted line shows position of NEUTRAL ground wire before being moved to center terminal block screw
b. Center silver-colored terminal block screw
c. White wire of harness

3. Connect ground wire (green or bare) of power supply cable to external ground conductor screw. Tighten screw.
4. Connect neutral wire (white or center wire) of power supply cord to the center, silver colored terminal screw of the terminal block.

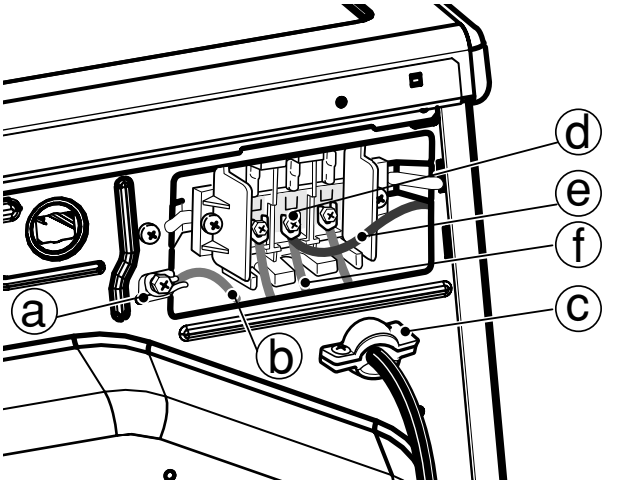

a. External ground connector
b. Green or bare copper wire of power supply cord
c. 3/4 in. (1.9 cm) UL-listed strain relief
d. Center silver-colored terminal block screw
e. Neutral grounding wire (white)
f. Neutral wire (white)

5. Connect the other wires to outer terminal block screws. Tighten screws.
6. Tighten strain relief screws.
7. Insert tab of terminal block cover into slot of dryer rear panel. Secure cover with hold-down screw.

Option 3: Optional 3-wire connection.

- If your local codes or ordinances do not allow the connection of a frame-grounding conductor to the neutral wire, use the instructions under this section.

1. Remove center terminal block screw.
2. Remove appliance neutral ground wire (white) from external ground connector screw. Connect appliance ground wire and the neutral wire (white or center wire) of power supply cord/cable under center, silver colored terminal block screw. Tighten screw.
3. Connect the other wires to outer terminal block screws. Tighten screws.

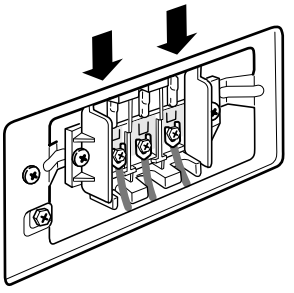

4. Tighten strain relief screws.
5. Insert tab of terminal block cover into slot of dryer rear panel. Secure cover with hold-down screw.
6. Connect a separate copper ground wire from the external ground connector screw to an adequate ground.

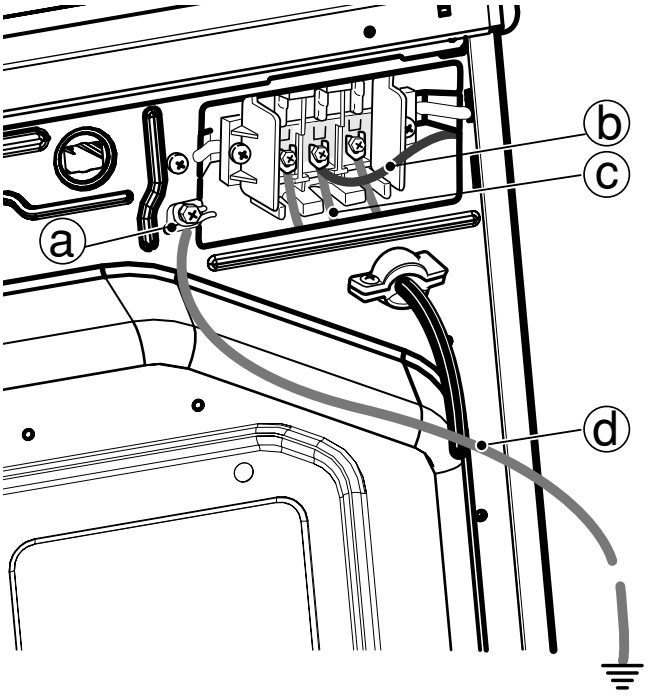

a. External ground connector
b. Neutral grounding wire (white)
c. Neutral wire (white or center wire)
d. Grounding path determined by a qualified electrician

Part 5 ELECTRICAL REQUIREMENTS FOR GAS DRYERS

120 Volt, 60 Hertz, with 3-Prong Grounding Plug

Following are additional instructions regarding electrical connections and requirements for gas dryers.

⚠ **Important Warning:** To help prevent fire, electric shock, serious injury or death, the wiring and grounding must conform to the latest edition of the National Electrical Code, ANSI/NFPA 70, or the Canadian Electrical Code, CSA C22.1, and all applicable local regulations. Please contact a qualified electrician to check your home's wiring and fuses to ensure that your home has adequate electrical power to operate the dryer.

Electrical Requirements for Your Dryer:

a) Please note that the wiring diagram is provided inside the dryer control hood. Label all wires prior to disconnection when servicing the dryer, because wiring errors can cause serious injury to you and your dryer.

b) Your dryer is designed to be used on a separate branch, polarized, three-wire, effectively grounded, 120 Volt, 60 Hertz, AC (alternating current) circuit protected by a 15 Ampere fuse, equivalent fusetron or circuit breaker.

c) Use separately fused circuits for washers and dryers, and DO NOT operate a washer and a dryer on the same circuit.

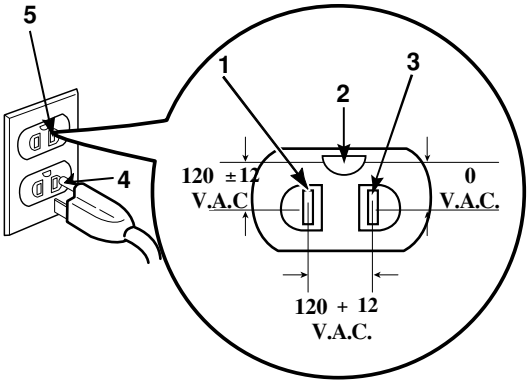

STANDARD 120 VOLT, 60 HERTZ, 3-WIRE EFFECTIVELY GROUNDED CIRCUIT

1	L1
2	Ground
3	Neutral Side
4	Round Grounding Prong
5	Neutral

a) The dryer has a three-prong plug to help guard against shock. The plug should be plugged directed into a properly grounded three-prong receptacle that is rated 120 Volts AC (alternating current) 15 Amps. This plug, in order to be properly and fully effective, must be plugged into a properly installed outlet that is grounded in accordance with all local codes and ordinances.

b) The dryer must be grounded in order to reduce the risk of electric shock, including a malfunction or breakdown.

c) If your laundry room does not meet the specifications required by this manual, or if you are uncertain whether or not your laundry room meets these specifications, please have a qualified service person or company, for example a qualified electrician or your local electric company, review your laundry room's electrical supply for any problems.

⚠ ***WARNING!***

Do not overload the circuit by operating other appliances on the same circuit when this appliance is operating, by using an extension cord to connect the dryer to the power source, or by using any adapter to allow additional cords to connect to the same outlet.

⚠ ***WARNING!***

DO NOT modify the plug provided with the dryer. If it does not fit the outlet in your laundry room, a proper outlet will need to be installed in your laundry room by a qualified service person or company.

Part 6 GAS REQUIREMENTS AND INSTRUCTIONS

Following are important instructions and information concerning the requirements for the gas supply and service for gas dryers. ⚠ **Important Warning:** The gas supply and service for a gas dryer must comply with all local codes and ordinances. In the absence of any local codes or ordinances in your area, the gas supply and service for your gas dryer must comply with the latest edition of the National Fuel Cas Code, ANSI Z223.1/NFPA 54.

1. Gas supply requirements: Liquefied Petroleum (L.P.) Gas (2,500 Btu/ft3 (93.1 MJ/m3)) service must be provided at 10 + 1.5 in. water column pressure.
2. Important: DO NOT connect the dryer to the Liquefied Petroleum (LP) Gas service without converting the gas value.
3. A qualified technician must perform the LP Gas conversion. Contact your local gas service branch if you require additional assistance or information.
4. Isolate the dryer from the gas supply piping system by closing its individual manual shut-off valve, during any pressure testing of the gas supply system at test pressure equal to or less than 2/1 psi (3.45 kPa).
5. Supply Line Requirements. Your laundry room must have a rigid gas supply line to your dryer. In the United States, an individual manual shutoff valve MUST be installed within at least 6 feet (1.8m) of the dryer, in accordance with the National Fuel Gas Coide ANSI Z223.1. A 1/8 in. N.P.T. pipe plug must be installed as shown.
6. If using a rigid pipe, the rigid pipe should be 1/2 inch IPS. If acceptable under local codes and ordinances and when acceptable to your gas supplier, 3/8 inch approved tubing may be used where lengths are less than 20 feet (6.1m). Larger tubing should be used for lengths in excess of 20 feet (6.1m). It is also important that you use pipe joint compound that is insoluble in LP gas.
7. To reduce the danger of gas leaks, explosion, and fire, please follow and observe the following **instructions and WARNINGS:**

- Connect the dryer to the type of gas shown on the nameplate;
- Use new flexible stainless steel connectors;
- Use Teflon tape and pipe joint compound insoluble in LP gas on all pipe threads;
- Purge gas supply of air and sediment before connecting the gas supply to the dryer; in order to prevent gas valve contamination, before tightening connection between gas supply and dryer, purge remaining air until odor of gas is identified; and
- DO NOT use an open flame to inspect for gas leaks; instead, use a non-corrosive leak detection fluid.

⚠ *WARNING!*

DO NOT attempt any disassembly of the dryer, any disassembly requires the attention and tools of an authorized and qualified service person or company.

⚠ *WARNING!*

- Use a new AGA or CSA approved gas supply line.
- Install a shut-off valve.
- Securely tighten all gas connections.
- If connected to LP, have a qualified person make sure gas pressure does not exceed 13 in. water column.
- Examples of a qualified person include licensed heating personnel, authorized gas company personnel, and authorized service personnel.
- Failure to do so can result in death, explosion, or fire.

Part 7 EXHAUST REQUIREMENTS AND MAINTENANCE

Following are important instructions and information concerning the exhaust requirements for your dryer.

⚠ **Important Warning:** To reduce the risk of fire, combustion, or accumulation of combustible gases, DO NOT exhaust dryer air into an enclosed and unventilated area, such as an attic, wall, ceiling, crawl space, chimney, gas vent, or concealed space of a building. To reduce the risk of fire, DO NOT exhaust the dryer with plastic or thin foil ducting.

Weather Hood Type	Number of 90° Elbows	Maximum length of 4" (10.2 cm) diameter rigid metal duct	Maximum length of 4" (10.2 cm) diameter flexible metal duct
Recommended 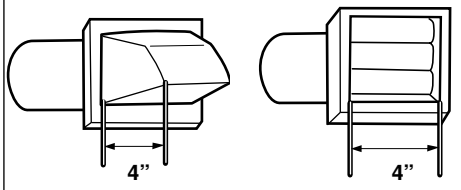	0	65 feet (19.8 m)	45 feet (13.7 m)
	1	55 feet (16.8 m)	35 feet (10.7 m)
	2	47 feet (14.3 m)	30 feet (9.1 m)
	3	36 feet (11.0 m)	25 feet (7.6 m)
	4	28 feet (8.5 m)	20 feet (6.1 m)
Use Only for Short Run Installations 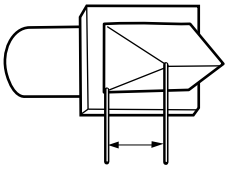	0	55 feet (16.8 m)	35 feet (10.7 m)
	1	47 feet (14.3 m)	27 feet (8.2 m)
	2	41 feet (12.5 m)	21 feet (6.4 m)
	3	30 feet (9.1 m)	17 feet (5.2 m)
	4	22 feet (6.7 m)	15 feet (4.5m)

NOTE : Deduct 6 feet (1.8 m) for each additional elbow.
It is not recommended to use more than 4 90° elbows.

Exhaust Requirements and Instructions:

1. Venting materials are not provided with the dryer and you should obtain the necessary venting materials locally. For example, the outer end of exhaust pipe must have a weather hood with hinged dampers to prevent back-draft when the dryer is not in use.
2. The exhaust duct must be four inches (10.2 cm) in diameter with no obstructions. The exhaust duct should be kept as short as possible. Make sure to clean any old ducts before installing your new dryer.
3. Rigid metal duct is recommended. Do not install flexible duct in concealed spaces. Non-combustible flexible metal duct is acceptable. Do not use plastic or thin foil ducting.
4. DO NOT use sheet metal screws on exhaust pipe joints or other fastening means which extend into the duct that could catch lint and reduce the efficiency of the exhaust system. Secure all joints with duct tape.
5. To maximize operating results, please observe the duct length limitations noted in the chart above.

Exhaust and Dryer Maintenance

⚠ WARNING!

Disconnect the dryer's electric power prior to any cleaning or maintenance.

1. After one year of use, the interior and complete exhaust system of the dryer should be examined and cleaned if necessary.
2. You should inspect and clean the exhaust duct at least yearly.
3. Check the weather hoods frequently to ensure the dampers are moving freely, that the dampers are not pushed in and that nothing has been set against the dampers.
4. A qualified service person or company should be used to perform this maintenance.
5. A Flexible Metal Vent Kit, available at extra cost, can be used to exhaust the dryer when it is placed in hard to reach places. This Kit comes in two pieces, one of which is attached to the dryer and the other is attached to the wall exhaust outlet. Following attachment of the two separate pieces to the dryer and the wall, the dryer may be returned to its final position, after which the two pieces themselves can be connected.
7. Ordinarily, the dryer drum will need no care. Wipe the exterior of the dryer as required, and always immediately wipe the exterior of the dryer in the event any detergent, bleach, or other washing products is spilled on the dryer, because these products may cause permanent damage to the exterior finish of the dryer.
8. Clean the control panel with a damp cloth as necessary. Warning: spray pre-wash products may damage the finish of the control panel.
9. Please clean the lint filter either before drying each load or after drying each load.
10. Always make sure the lint filter is clean before starting a new load, because a clogged lint filter may increase drying times.
11. Annually remove the lint filter and attach it to the vacuum duct. See item #2 above.
12. Please note that the wiring diagram is provided inside the dryer control hood. Label all wires prior to disconnection when servicing the dryer, because wiring errors can cause serious injury to you and your dryer.

Cleaning the Lint Screen

1. Clean the lint filter either before drying each load or after drying each load. Always make sure the lint filter is clean before starting a new load, because a clogged lint filter may increase drying times.
2. To clean, pull the lint screen straight up and roll any lint off the screen with your fingers. Do not rinse or wash screen to remove lint, because wet lint is hard to remove. Push the lint screen firmly back into place.
3. Always ensure the lint screen is firmly secured before running the dryer. Running the dryer with a loose lint screen may cause overheating and damage to the dryer and articles being dried.
4. Some articles may shed more lint than other towels (for example, towels made of synthetic fibers and natural fibers), causing the lint screen to become congested more quickly. Remove lint from the lint screen before and after drying these articles, such as new towels.
5. In the event lint falls off of the lint screen and into the dryer during removal, inspect the exhaust hood and remove any lint.
6. Laundry detergent and fabric softener residue can build up on the lint screen, causing longer drying times. The screen is likely blocked if lint falls off the screen. In order to prevent this type of build up, and help ensure proper operation of your dryer, clean the lint screen with a nylon brush every six months or, if necessary, more frequently. The lint filter can also be washed as follows:

a) After rolling the lint off of the screen with your fingers, wet both sides of the screen with hot or warm water.

b) Wet a nylon brush with hot water and liquid detergent and scrub the lint screen with the brush to remove the buildup of detergent and fabric softener.

c) Repeat as necessary.

d) After the residue has been removed, rinse screen with hot water.

e) After drying the lint screen with a clean towel, firmly replace the lint screen in your dryer.

Part 8 OPERATING YOUR DRYER

Following are instructions for starting and using your new dryer. Please refer to specific sections of this manual for more detailed information. Important Warning: To reduce the risk of fire, electric shock, or injury to person, read this entire manual, including the **Important Safety Instructions**, before operating this dryer.

DLE5977W/DLG5988W/DLE5977B/DLG5988B

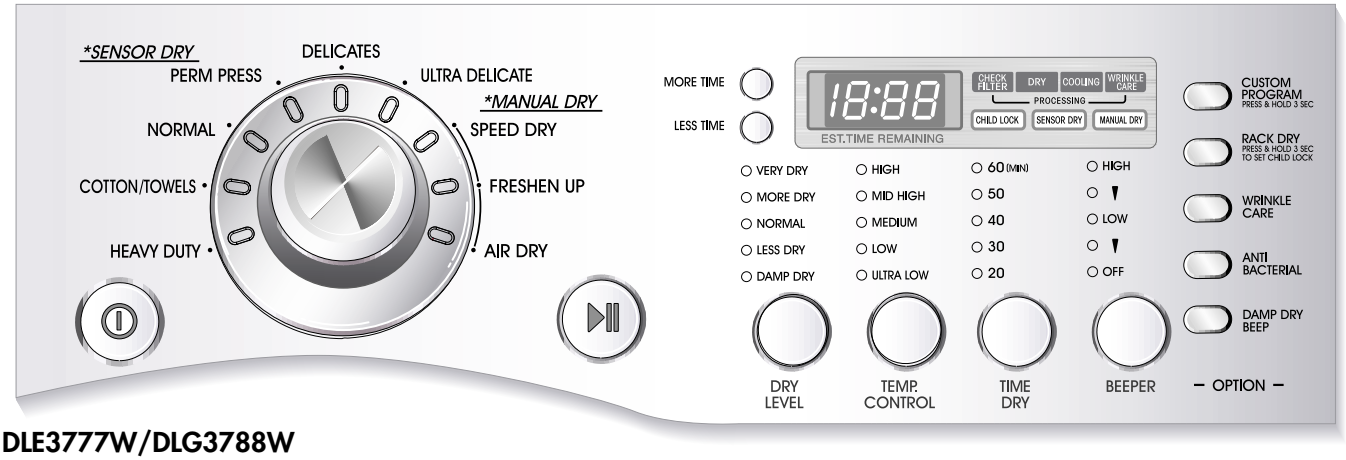

DLE3777W/DLG3788W

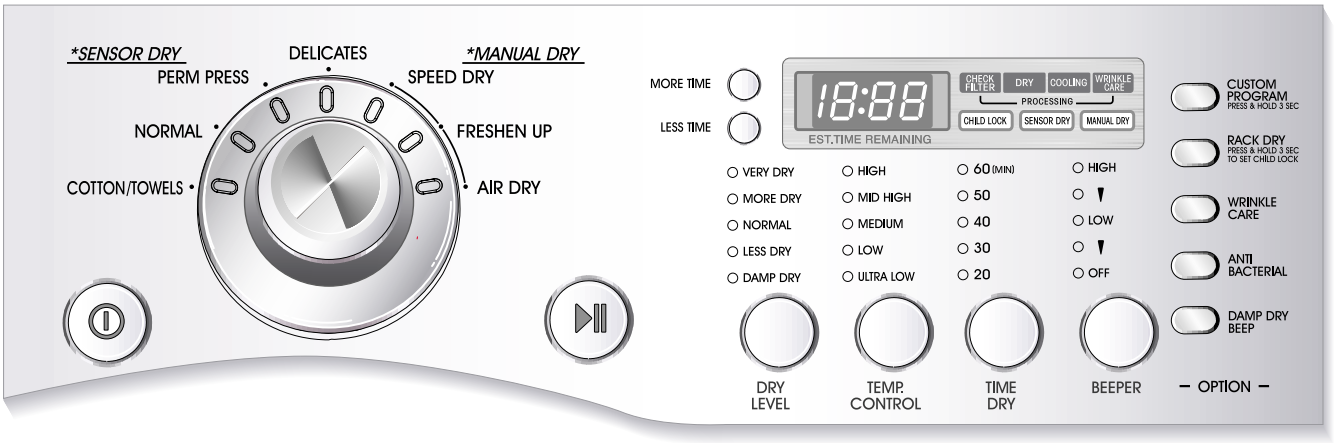

STARTING YOUR DRYER

1. Using Your Dryer

1. Clean lint screen before or after each cycle.
2. Place laundry into dryer and shut door. See Loading.
3. Turn the knob to select the drying cycle you want. The preset settings for Sensor Dry Cycles or Manual Cycles will glow. The estimated or actual cycle time (in minutes) will show in the display.

⚠ WARNING!

Explosion Hazard

Keep flammable materials and vapors, such as gasoline, away from dryer.

Do not dry anything that has ever had anything flammable on it (even after washing).

Failure to follow these instructions can result in death, explosion, or fire.

⚠ WARNING!

Fire Hazard

No washer can completely remove oil.

Do not dry anything that has ever had any type of oil on it (including cooking oils).

Items containing foam, rubber, or plastic must be dried on a clothesline or by using an Air Cycle. Failure to follow these instructions can result in death or fire.

2. To use a Sensor Dry Cycle

- **Select** an Sensor Dry Cycle.
- **Select** DRY LEVEL to adjust how dry you want the load. As the cycle runs, the control senses the dryness of the load and adjusts the time automatically for the selected dryness level.
- **Select** the desired Options.
- **Press** START/PAUSE

NOTE: DRY LEVEL selections can only be made while using Sensor Dry Cycles. Selecting MORE Dry or LESS Dry automatically adjusts the sensed time needed.

3. To use a Manual Dry Cycle

- Select a Manual Dry Cycle.
- Press MORE TIME or LESS TIME until the desired drying time is displayed. Tap MORE TIME or LESS TIME and the time will change by 1 minute intervals.
  NOTE: The MORE TIME or LESS TIME feature can be used with Manual Dry, Time Dry, and Rack Dry Cycles.

- Press TEMP. CONTROL until the desired temperature indicator glows.
- (OPTIONAL STEP) If desired, select OPTIONS. For more details, see Options.
- Press START/PAUSE. Be sure the door is closed.
- If you do not press START/PAUSE within 10 minutes of selecting the cycle, the dryer automatically shuts off.
- If you wish to end your drying cycle after pressing START/PAUSE, press START/PAUSE again.

4. Stopping Your Dryer

To stop your dryer at any time

Press START/PAUSE or open the door.

Pausing or Restarting

To pause the dryer at any time

Open the door or press START/PAUSE once.

To restart the dryer

Close the door. Press START/PAUSE.

NOTE: Drying will continue from where the cycle was interrupted if you close the door and press START within 10 minutes. If the cycle is interrupted for more than 10 minutes, the dryer will shut off. Select new cycle settings before restarting the dryer.

5. Loading

Properly loading your dryer can lower your utility bill and prolong the life of your garments.

Loading suggestions

Load the dryer by the amount of space items take up, not by their weight.

Do not overload the dryer. This causes uneven drying and wrinkling.

Following are sample loads for Super Capacity Dryers:

Heavy Work Clothes

4 jeans	2 sweatpants
4 workpants	2 sweatshirts
4 work shirts	

Cotton/Towels

10 bath towels	14 wash cloths
10 hand towels	

Mixed Load

3 sheets (1 king, 2 twin)	9 T-shirts
4 pillowcases	9 shorts
3 shirts	10 handkerchiefs
3 blouses	

Child Lock

This feature allows you to lock your settings to prevent children from changing them. You can also use the child lock feature to prevent unintended cycle or option changes during dryer operation.

To enable the Child Lock feature:

Press and hold RACK DRY for 3 seconds. A single BEEP Tone is heard, and CL is displayed. To unlock, press and hold RACK DRY for 3 seconds. The indicator light turns off.

6. Cycle Descriptions

Select the drying cycle that matches the type of load you are drying.

(See Sensor Dry or Manual Preset Cycle Settings charts.)

Sensor Dry Cycles allow you to match the cycle to the load you are drying. Each cycle dries certain fabrics at the recommended temperature. A sensor detects the moisture in the load and automatically adjusts the drying time for optimal drying

Sensor Dry Cycle

- **Heavy Duty**
  Use this cycle to get high heat for heavy fabrics such as jeans, corduroys, or work clothes.
- **Cotton/Towels**
  Use this cycle to get medium-high heat for drying denims and towels.
- **Normal**
  Use this cycle to get medium heat for drying sturdy fabrics such as work clothes, casual clothes, and cotton jerseys.
- **Perm press**
  Use for permanent press and synthetic items.
- **Delicates**
  Use this cycle to get low heat for drying synthetic fabrics, washable knit fabrics, and no-iron finishes.
- **Ultra Delicate**
  Use this cycle to get ultra low heat to gently dry items such as lingerie, exercise wear, or sheer curtains.

Sensor Dry Preset Cycle Settings

Sensor Dry Cycles Load Type	Temp.	Time* (Minutes)
HEAVY DUTY Heavyweight, jeans	**High**	**54**
COTTON/TOWELS Denim pants, towel	**Medium High**	**55**
NORMAL Corduroys, work clothes	**Medium**	**41**
PERM PRESS Permanent press, synthetics	**Low**	**36**
DELICATES Sheets, lingerie, blouses	**Low**	**32**
ULTRA DELICATE Exercise wear, sheer curtains, lace	**Ultra Low**	**34**

* Estimated Time with SENSOR DRY LEVEL (Normal) setting.

Manual Cycles

Use Manual Cycles to select a specific amount of drying time and a drying temperature. When a Manual Cycle is selected, the ESTIMATED TIME REMAINING display shows the actual time remaining in your cycle. You can change the actual time in the cycle by pressing MORE TIME or LESS TIME.

- **Speed Dry**
  Use this cycle for drying small loads or loads that need a short drying time.
- **Freshen Up**
  Use this cycle to remove wrinkles from items, such as clothes packed in a suitcase or items wrinkled from being left in the dryer too long.
- **Air Dry**
  Use the Air Dry Modifier for items that require drying without heat such as rubber, plastic and heat-sensitive fabrics.

- **Time Dry**
  Use this cycle to complete drying if items are still damp after an Sensor Dry Cycle. Time dry is also useful for drying heavyweight and bulky items, such as bedspreads and work clothes.

Manual Preset Cycle Settings

Manual Dry Cycles Load Type	Temp.	Default Time* (Minutes)
SPEED DRY SMALL LOADS	**High**	**25**
FRESHEN UP Remove Wrinkles	**Medium High**	**20**
AIR DRY	**Air Dry**	**30**

7. Options

You can customize your cycles by selecting options.

Damp Dry Beep

Select DAMP DRY BEEP to alert you that your clothes are approximately 80% dry. This is useful when you want to remove lightweight items in a mixed load to prevent overdrying or remove partially dry items that may need ironing.

NOTE: The Damp Dry Beep is only available with the Sensor Dry Cycles.

WRINKLE CARE

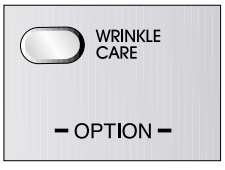

WRINKLE CARE prevents wrinkles that form when you cannot unload the dryer promptly at the end of a cycle. During this option, the dryer will periodically tumble.

- Press WRINKLE CARE to get up to 3 hours of heat-free, periodic tumbling at the end of a cycle.
- Stop WRINKLE CARE at any time by pressing WRINKLE CARE or opening the dryer door.

NOTE: If you do not select WRINKLE CARE, the dryer stops after cool down.

8. Modifiers

Use Modifiers to select temperatures for the Manual Cycles. Press TEMP. CONTROL until the desired temperature setting glows. Temperature modifiers cannot be used with the Sensor Dry Cycles.

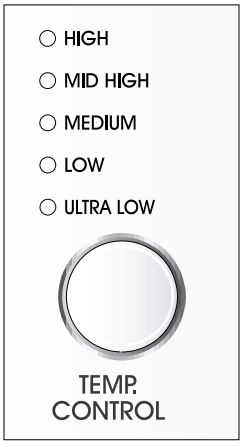

When using Air Dry

This chart shows examples of items that can be dried using AIR DRY.

Type of Load	Default Time* (Minutes)
Foam rubber-pillows, padded bras, stuffed toys	20 - 30
Plastic-Shower curtains, tableclothes	20 - 30
Rubber-backed rugs	40 - 50
Olefin, polypropylene, sheer nylon	10 - 20

Reset cycle to complete drying, if needed.

- Check to see that coverings are securely stitched.
- Shake and fluff pillows by hand periodically during the cycle.
- Dry item completely. Foam rubber pillows are slow to dry.

NOTE: Air Dry is not available with Sensor Dry Cycles.

9. Rack Dry

The dryer rack is shipped in place in your dryer. Remove and discard any packing material before use.

The RACK DRY is designed for use with items that you do not want to tumble dry, including sweaters and similar items. The heated dryer rack allows the heated air inside the dryer to flow in a concentrated pattern, allowing effective and consistent drying. Use RACK DRY to select the desired time.

To use the RACK DRY:

1.Open the door.

Hold the dryer rack with both hands.

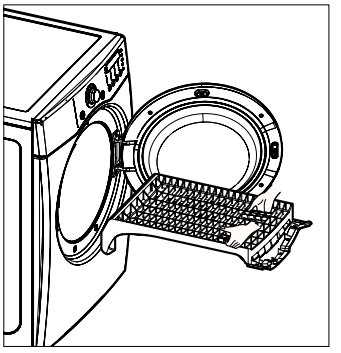

2. Put the dryer rack into the drum

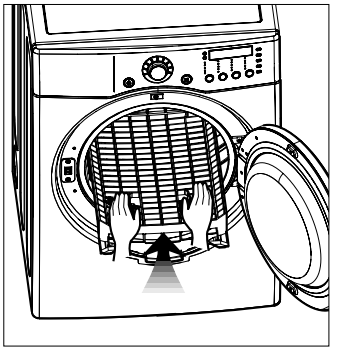

3. Make sure that dryer is evenly placed right onto the drum inside and door rim.

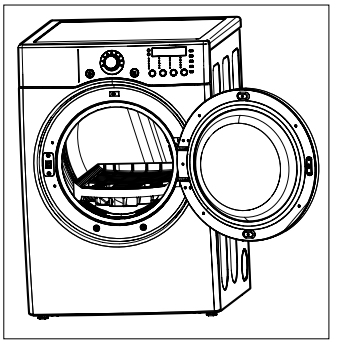

NOTE: Check the lint screen and remove any lint accumulated from items dried on the rack.

Suggested Items for Rack Drying	Temperature Setting	Suggested Time* (Minutes)
Washable wool items (block to shape and lay flat on rack)	Low	20
Stuffed toys (cotton or polyester fiber filling)	Low/Ultra Low	20/30
Stuffed toys (foam rubber filled)	Air Dry/ Ultra Low	50/30
Foam rubber pillows	Air Dry	50
Tennis shoes	Air Dry	20

* Reset time as needed to complete drying.

- Select RACK DRY and MORE TIME or LESS TIME. Reset time as needed to complete drying. Refer to the following table.
- Select the desired temperature setting to match the fabrics in your load by pressing TEMP. CONTROL (Air Dry-Ultra Low-Low). Items containing foam, rubber, or plastic must be dried on a clothesline or by using the Air Dry temperature setting. Refer to the following table.
- Start the dryer.

10. Anti Bacterial

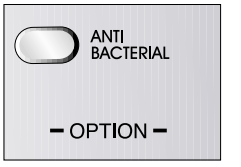

This option can only be used with the HEAVY DUTY, COTTON/TOWELS, and NORMAL cycles.

This option reduces certain types of bacteria.
The ANTI BACTERIAL process produces high temperature during the cycle.

NOTE: Do not use this cycle on delicate fabrics.

11. Custom Programming

Set up your favorite combination of settings and save them here for one-touch recall.

To store a CUSTOM PROGRAM.

1. Select a cycle
2. Change DRY LEVEL and TEMP. CONTROL.
3. Select OPTIONS you want.
4. Press and hold the CUSTOM PROGRAM.

To recall your stored CUSTOM PROGRAM

Press CUSTOM PROGRAM button, then press START/PAUSE.

12. Beeper

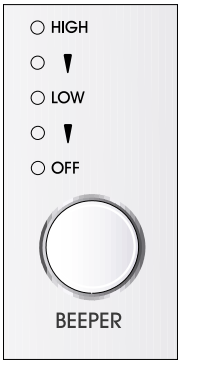

The BEEPER controls the volume of the beep that is made when you press any of the buttons on the control panel and the termination of any cycle is indicated.

Press BEEPER to adjust the sound level or turn off the signal.

Maintenance

Clean lint filter

Clean the lint filter after each use and check it before use. Not cleaning or emptying the filter will increase drying time and energy consumption, therefore dryer life expectancy could be shortened after all.

■ Clean the door and its opening

1. Wipe out the door opening. Otherwises, build-ups of dirts and foreign objects will damage sealing of door.

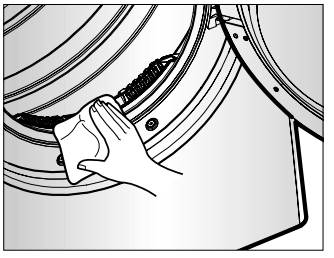

2. Clean the transparent glass door to keep inside view clear througth the glass.

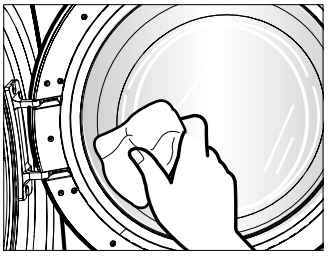

1.Open the door and pull the filter straight up

2.Clean the filter using one of following ways in cases.

① Run the fingers across the filter

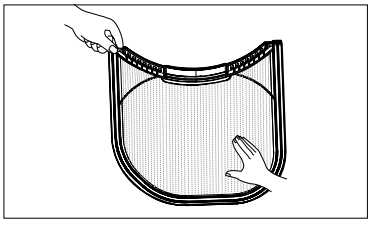

② Vaccum the lint filter

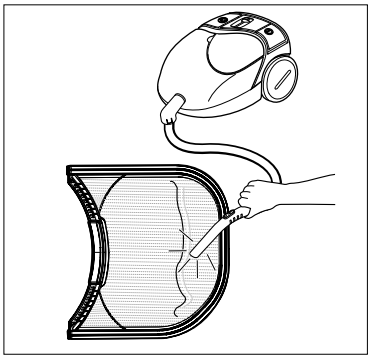

③ Wash the lint screen in warm,soapy water.
Dry thoroughly and replace.

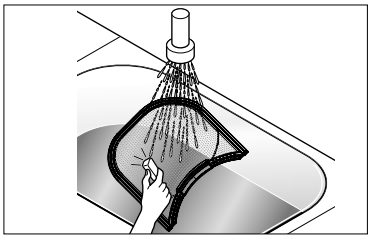

Part 9 TROUBLESHOOTING GUIDE

Troubleshooting Tips
Save time and money! Review the charts on the following pages first and you may not need to call for service.

1.Problem:My Dryer Won 't Start

Question	What to Do
• Is the dryer plugged in?	Confirm that the dryer's plug is securely and completely pushed into the laundry room's power outlet
• Is the fuse blown, or is the circuit breaker tripped?	Check your home's or laundry room's fuse box/circuit breaker box and replace the fuse or reset the circuit breaker. (IMPORTANT: electric dryers generally use two fuses or breakers.)

2.Problem:My Dryer Doesn 't Heat

Question	What to Do
• Is the fuse blown, or is the circuit breaker tripped?	If the fuse is blown or the circuit breaker tripped, the dryer might tumble but not heat. Check your home's or laundry room's fuse box / circuit breaker box and replace the fuse or reset the circuit breaker. (IMPORTANT: electric dryers generally use two fuses or breakers.)
• Is the gas supply or service blocked or off?	Confirm that the house gas shutoff and the dryer gas shutoff are both fully open.

3.Problem:There are Greasy Spots on My Clothes

Question	What to Do
• Did you follow the instructions on your fabric softener product?	Confirm and follow the instructions provided with your fabric softener product.
• Are you drying clean and dirty clothes together?	Make sure to use your dryer to dry only clean items, because dirty items can soil clean clothes placed in the same load or later placed in the dryer drum.
• Were your clothes entirely clean?	Stains on dried clothes are actually stains that weren't cleansed during the washing process. Please review and confirm that you are following your washing instructions and that the clothes are being completely cleaned.

4.Problem:There is Lint on my Clothes

Question	What to Do
• Is your lint filter full?	Please refer to the manual section on cleaning the lint filter, and please confirm that the lint filter is clean. It is important that the lint filter is clean before each new load of laundry.
• Did you properly sort your load of laundry?	In order to reduce the amount of lint in a load of laundry, sort lint producers (like a fuzzy white cotton towel) separately from clothes that might catch lint (such as a pair of black linen pants).
• Do your clothes have excess static electricity?	See comments below under There is static in my clothes after drying.
• Did you overload your dryer?	Divide your larger load into smaller loads.
• Did you place any paper, tissue, or other similar material in the load?	Sometimes a person might forget to take a piece of paper or a tissue out of the pocket of a pair of pants, and this paper, tissue, or similar material can cause excess lint in a load of laundry. Confirm that the pockets of pants, shirts, and other articles of clothing are empty before washing and drying.

5.Problem:There is static in my clothes after drying

Question	What to Do
• Did you use fabric softener?	Try using a fabric softener to reduce static electricity.
• Did you over dry the load of laundry?	Over-drying a load of laundry can cause a build up of static electricity. Try using a fabric softener or adjust your settings and use a shorter drying time.
• Are you drying synthetic, permanent press and blends?	These materials can cause static to build up in a load of dried clothes. Try using a fabric softener.

6.Problem:The drying time is not consistent

Question	What to Do
• Are you using consistent heat settings and consistent load sizes?	The drying time for a load will vary depending on the heat setting, the type of heat used (electric, natural or LP gas), the size of the load, the type of fabrics, the wetness of the clothes and the condition of the exhaust ducts and lint filer.

7.Problem:It takes too long for my clothes to dry

Question	What to Do
• Did you properly sort your loads of laundry?	Separate heavy weight items from light weight items when creating loads.
• Are you drying large loads of heavy fabrics?	Heavy fabrics take longer to dry because they tend to retain more moisture. To help reduce and maintain more consistent drying times for large and heavy fabrics, separate these items into smaller loads of a consistent size.
• Are the dryer controls properly set?	Use the appropriate control settings for the type of load you are drying.
• Is the lint filter clean before each new load of laundry?	Please confirm that the lint filter is clean prior to each new load of laundry.
• Are the exhaust ducts clear and properly configured?	Confirm through review of the appropriate sections of this manual that the exhaust venting ductwork is properly configured. Confirm that the venting is free of obstructions. Confirm that the outside wall dampers are moving freely, that the dampers are not pushed in, and that nothing has been set against the dampers.
• Is the fuse blown, or is the circuit breaker tripped?	Check your home's or laundry room's fuse box/circuit breaker box and replace the fuse or reset the circuit breaker. (IMPORTANT: electric dryers generally use two fuses or breakers.)
• Did you overload your dryer?	Divide your larger load into a number of smaller loads.
• Did you under load your dryer?	If you are only drying a handful of items, add a few extra pieces to help ensure proper tumbling action.

8.Problem:My clothes are wrinkled

Question	What to Do
• Are you over drying your laundry?	Over drying a load of laundry can lead to wrinkled clothes. Try a shorter drying time, and remove items while they still retain a slight amount of moisture.
• Are you removing your laundry from the dryer soon after the drying cycle is complete?	Remove your laundry from the dryer after the drying cycle ends and either hang or fold the items.

9.Problem:My clothes are shrinking

Question	What to Do
• Are you following the care instructions for your garment?	To avoid shrinkage, please carefully follow the care and use instructions for your garment, because some fabrics will naturally shrink when washed. Other fabrics can be washed but will shrink when dried in a dryer.

LG DRYER LIMITED WARRANTY – USA

LG Electronics Inc. will repair or at its option replace, without charge, your product if it proves to be defective in material or workmanship under normal use during the warranty period set forth below, effective from the date of original consumer purchase of the product. This limited warranty is good only to the original purchaser of the product and effective only when used in the United States including Alaska, Hawaii, and U.S. Territories.

WARRANTY PERIOD:	HOW SERVICE IS HANDLED:
Labor: 1 Year from the Date of Purchase. **All Parts: 1 Year** from the Date of Purchase.	Call 1-877-714-7486 and choose the appropriate prompt. Please have product type (Dryer) , model number, serial number, and ZIP code ready. The warranted 1-year of labor covers the cost of In-Home Service on all parts including the Drum Tub and Motor.

THIS WARRANTY IS IN LIEU OF ANY OTHER WARRANTIES, EXPRESS OR IMPLIED, INCLUDING WITHOUT LIMITATION, ANY WARRANTY OF MERCHANTABILITY OR FITNESS FOR A PARTICULAR PURPOSE. TO THE EXTENT ANY IMPLIED WARRANTY IS REQUIRED BY LAW, IT IS LIMITED IN DURATION TO THE EXPRESS WARRANTY PERIOD ABOVE. LG WILL NOT BE LIABLE FOR ANY CONSEQUENTIAL, INDIRECT, OR INCIDENTAL DAMAGES OF ANY KIND, INCLUDING LOST REVENUES OR PROFITS, IN CONNECTION WITH THE PRODUCT. SOME STATES DO NOT ALLOW LIMITATION ON HOW LONG AN IMPLIED WARRANTY LASTS OR THE EXCLUSION OF INCIDENTAL OR CONSEQUENTIAL DAMAGES, SO THE ABOVE LIMITATIONS OR EXCLUSIONS MAY NOT APPLY TO YOU.

THIS LIMITED WARRANTY DOES NOT APPLY TO:

1. Service trips to your home to deliver, pick up, and/or install the product, instruct, or replace house fuses or correct wiring, or correction of unauthorized repairs; and

2. Damages or operating problems that result from misuse, abuse, operation outside environmental specifications or contrary to the requirements or precautions in the Operating Guide, accident, vermin, fire, flood, improper installation, acts of God, unauthorized modification or alteration, incorrect electrical current or voltage, or commercial use, or use for other than intended purpose.

3. **Therefore, the cost of repair or replacement of such a defective product shall be borne by the consumer.**

CUSTOMER INTER-ACTIVE CENTER NUMBERS:

To Prove Warranty Coverage	**Retain your Sales Receipt to prove date of purchase.** A copy of your Sales Receipt must be submitted at the time warranty service is provided.
To Obtain Nearest Authorized Service Center or Sales Dealer, or to Obtain Product, Customer, or Service Assistance	**Call 1-877-714-7486** (24 hrs a day, 7 days per week) and choose the appropriate prompt from the menu, and have your product type (Dryer) , model number, serial number, and ZIP Code; or visit our website at **http://www.lgservice.com**.